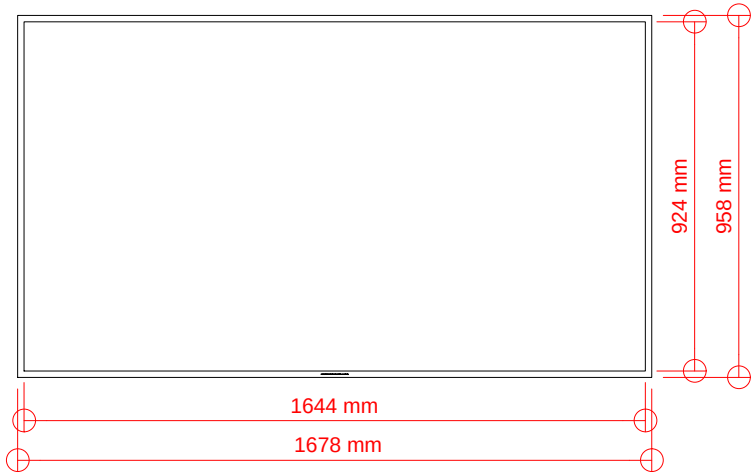

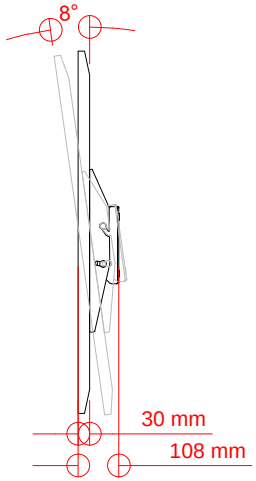

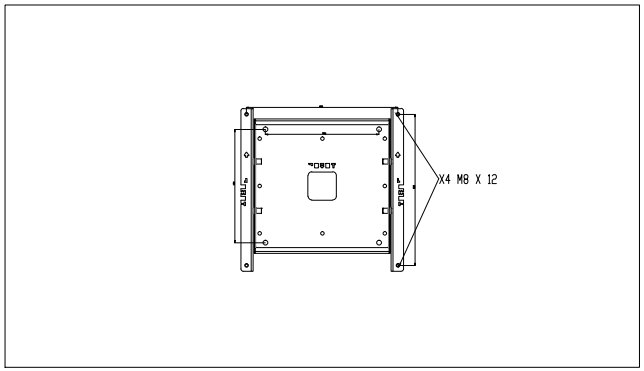

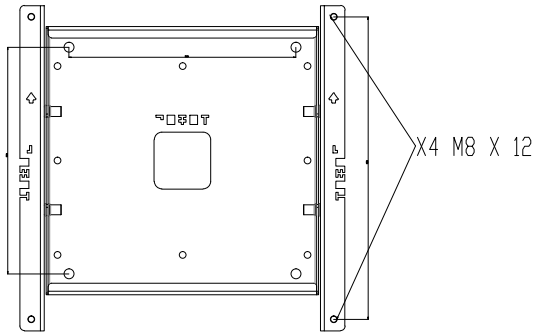

CPL ENHANCED TECHNOLOGY	Scale: 1:20@A4 Drawn By: RB Date: 28/11/18 Revision: XX	Event: XXXXXXXXXXXXXXXXXXXX Dates: XXXXXXXXXXXXXXXXXXXX Venue XXXXXXXXXXXXXXXXXXXX Room: XXXXXXXXXXXXXXXXXXXX	Client: XXXXXXXXXXXXXXXXXXXX Contact: XXXXXXXXXXXXXXXXXXXX Reference: XXXXXXXXXXXXXXXXXXXX Rev. Date: ----	Information: Samsung ME75B LED Screen	This drawing and the design are the property of CPL and must not be used or copied by a third party without permission.